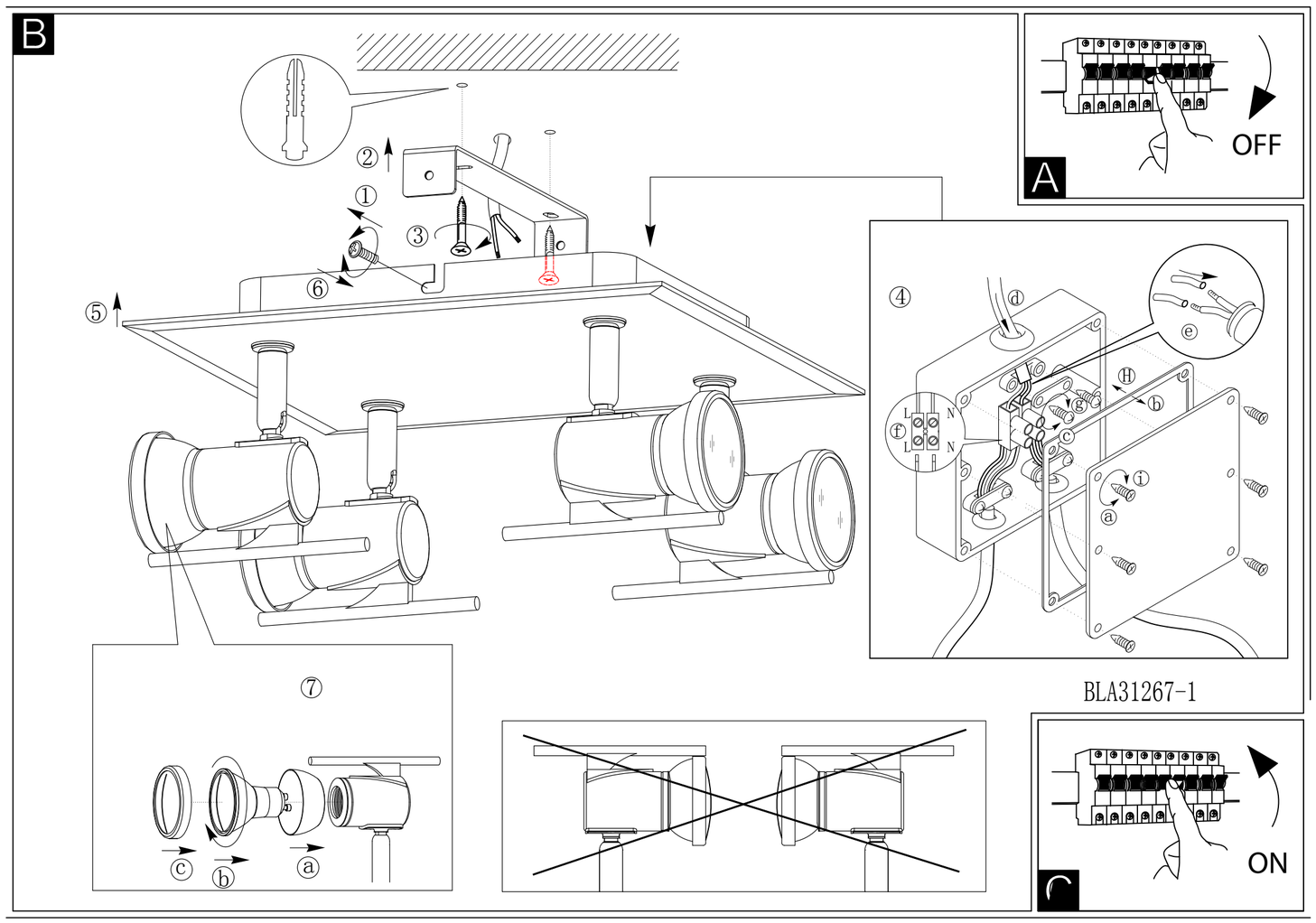
B
A
OFF
ON
BLA31267-1